Illuminator™ System
Series Hypernova

3.2 kW – 80 kW

Installation Guide

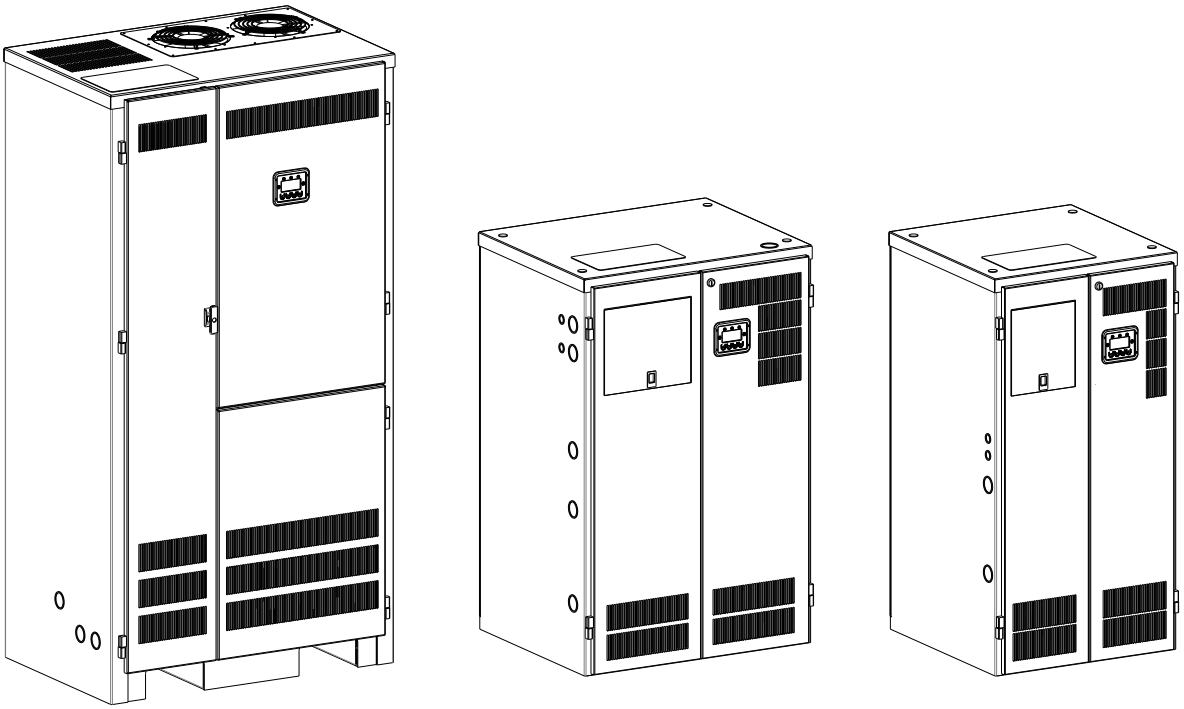

44 South Commerce Way, Bethlehem, PA 18017
1-800-526-5088 • (610) 868-3500 • Fax: (610) 868-8686
Service: (610) 868-5400
www.myerseps.com

115893G - System Installation Manual

This unit contains LETHAL VOLTAGES. All repairs and service should be performed by AUTHORIZED SERVICE PERSONNEL ONLY! There is NO USER SERVICEABLE PARTS inside this unit.

IMPORTANT SAFEGUARDS

When using electrical equipment, you should always follow basic safety precautions, including the following:

1. **READ AND FOLLOW ALL SAFETY INSTRUCTIONS.**
2. **Do not install the system outdoors.**
3. **Do not install near gas or electric heaters or in other high-temperature locations.**
4. **Use caution when servicing batteries. Depending on battery type, batteries contain either acid or alkali and can cause burns to skin and eyes. If battery fluid is spilled on skin or in the eyes, flush with fresh water and contact a physician immediately.**
5. **Equipment should be mounted in locations where unauthorized personnel will not readily subject it to tampering.**
6. **The use of accessory equipment not recommended by Manufacturer may cause an unsafe condition and void the warranty.**
7. **Do not use this equipment for other than its intended use.**
8. **Qualified service personnel must perform all servicing of this equipment.**

SAVE THESE INSTRUCTIONS

The installation and use of this product must comply with all national, federal, state, municipal, or local codes that apply. If you need help, please call Service.

C A U T I O N

READ ENTIRE MANUAL AND REVIEW ALL DOCUMENTATION BEFORE ATTEMPTING SYSTEM INSTALLATION!

FOR SERVICE OR INSTALLATION INFORMATION:
TELEPHONE: (610) 868-5400 (24 HR. HOTLINE)
FAX: (610) 954-8227

FOR YOUR PROTECTION....
PLEASE COMPLETE AND RETURN WARRANTY REGISTRATION CARD IMMEDIATELY.

Table of Contents

CHAPTER 1: SAFETY WARNINGS **4**
CHAPTER 2: INTRODUCTION **5**
CHAPTER 3: BEFORE INSTALLATION **6**
CHAPTER 4: INSTALLATION OVERVIEW **13**
CHAPTER 5: AC INPUT & AC OUTPUT INSTALLATION **16**
CHAPTER 6: INSTALLING BATTERIES AND DC WIRING **22**
CHAPTER 7: TURNING ON THE SYSTEM AND SETTING PARAMETERS **30**

CHAPTER 1

SAFETY WARNINGS

Read the following precautions before you install the Emergency Lighting Inverter.

IMPORTANT SAFETY INSTRUCTIONS

SAVE THESE INSTRUCTIONS. This manual contains important instructions that you should follow during installation and maintenance of the system and batteries. Please read all instructions before operating the equipment and save this manual for future reference.

DANGER

This system contains **LETHAL VOLTAGES**. AUTHORIZED SERVICE PERSONNEL should perform all repairs and service **ONLY**. There is **NO USER SERVICEABLE PARTS** inside the Emergency Lighting Inverter.

WARNING

- Do not install the system outdoors.
- Do not install near gas or electric heaters or in other high-temperature locations.
- Use caution when servicing batteries. Battery acid can cause burns to skin and eyes. If acid is spilled on skin or in the eyes, flush with fresh water and contact a physician immediately.
- Equipment should be mounted in locations where it is not readily subjected to tampering by unauthorized personnel.
- The use of accessory equipment not recommended by the manufacturer may cause an unsafe condition.
- Do not use this equipment for other than intended use.
- Only qualified service personnel (such as a licensed electrician) should perform the system and battery installation and initial startup. Risk of electrical shock.

CHAPTER 2

INTRODUCTION

Please read this manual thoroughly before operating your safety system. Keep this manual and the system User's Guide in the folder mounted inside the unit's door.

WARNING

Only qualified service personnel (such as a licensed electrician) should perform the system and battery installation and initial startup. Risk of electrical shock exists.

Please record your unit's part number, serial number, and model number below. You can find these numbers on the labels on the inside of the system's right door.

Part Number _____

Serial Number _____

Model Number _____

CHAPTER 3

BEFORE INSTALLING THE UNIT

Installation Dimensions and Clearances

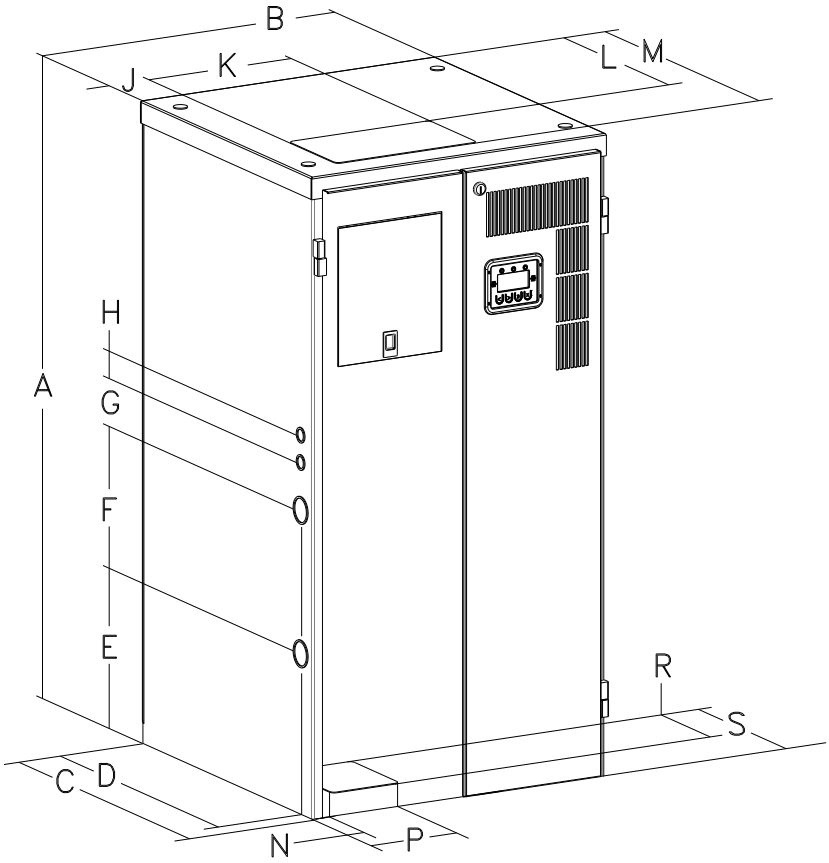

Figure 3.1

Table 3.1 Dimensions: 3.2-10kW, 90m runtime (3.0-7.5kW, 120m runtime)

Unit	Height (A)	Width (B)	Depth (C)	(D)	(E)	(F)	(G)	(H)
Electronics Cabinet	47” (119.4 cm)	24” (61.0 cm)	25” (64.0 cm)	22.5” (57.2 cm)	11.8” (30.0 cm)	10.5” (26.7 cm)	3.5” (8.9 cm)	2” (5.1 cm)

Table 3.1 Dimensions: 3.2-10kW, 90m runtime (3.0-7.5kW, 120m runtime)

Unit	(J)	(K)	(L)	(M)	(N)	(P)	(R)	(S)
Electronics Cabinet	3.5” (8.9 cm)	11.3” (28.7 cm)	15.5” (39.4 cm)	21.5” (54.6 cm)	2.3” (5.8 cm)	7.3” (18.5 cm)	2.8” (7.1 cm)	7” (17.8 cm)

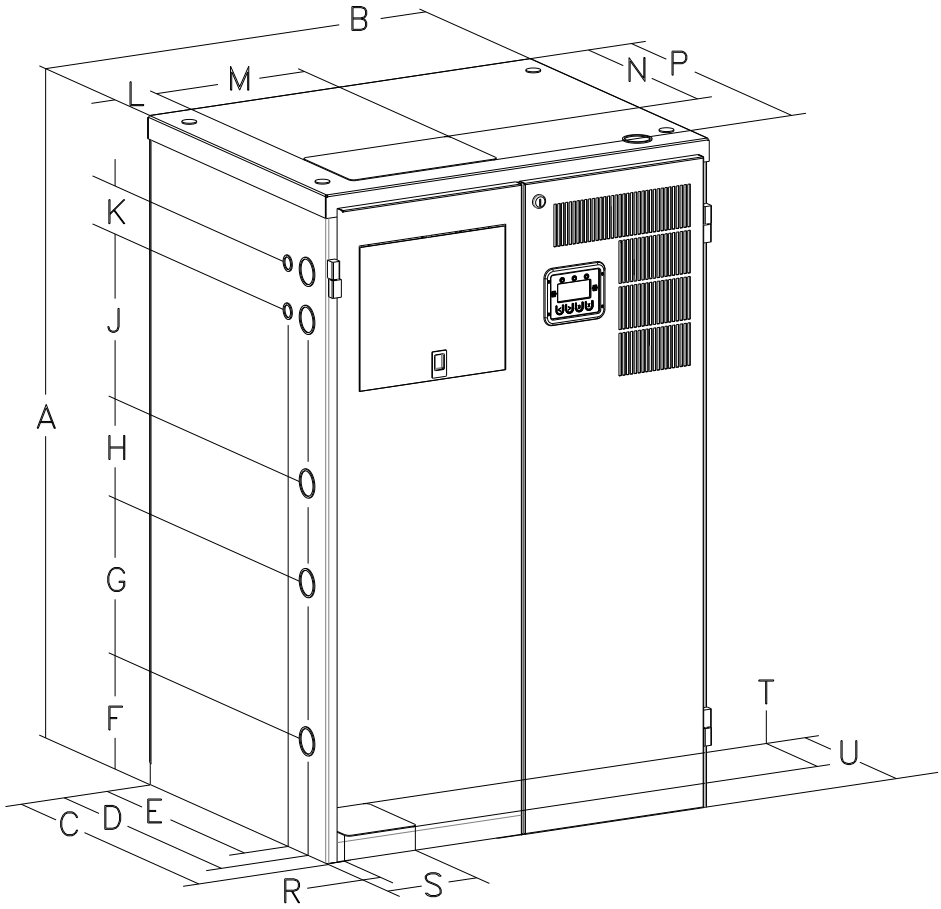

Figure 3.2

Table 3.2 Dimensions: 12.5-16.7kW, 90m runtime (9.3-12.5kW, 120m runtime)

Unit	Height (A)	Width (B)	Depth (C)	(D)	(E)	(F)	(G)	(H)
Electronics Cabinet	47” (119.4 cm)	30” (76.2 cm)	25” (64.0 cm)	21.5” (54.6 cm)	19” (48.3 cm)	8” (20.3 cm)	11.1” (28.2 cm)	7” (17.8 cm)

Table 3.2 Dimensions: 12.5-16.7kW, 90m runtime (9.3-12.5kW, 120m runtime)

Unit	(J)	(K)	(L)	(M)	(N)	(P)	(R)	(S)	(T)	(U)
Electronics Cabinet	11.5” (29.2 cm)	3.4” (8.6 cm)	3.5” (8.9 cm)	11.3” (28.7 cm)	15.5” (39.4 cm)	21.5” (54.6 cm)	2.4” (6.1 cm)	7.3” (18.5 cm)	6” (15.2 cm)	7” (17.8 cm)

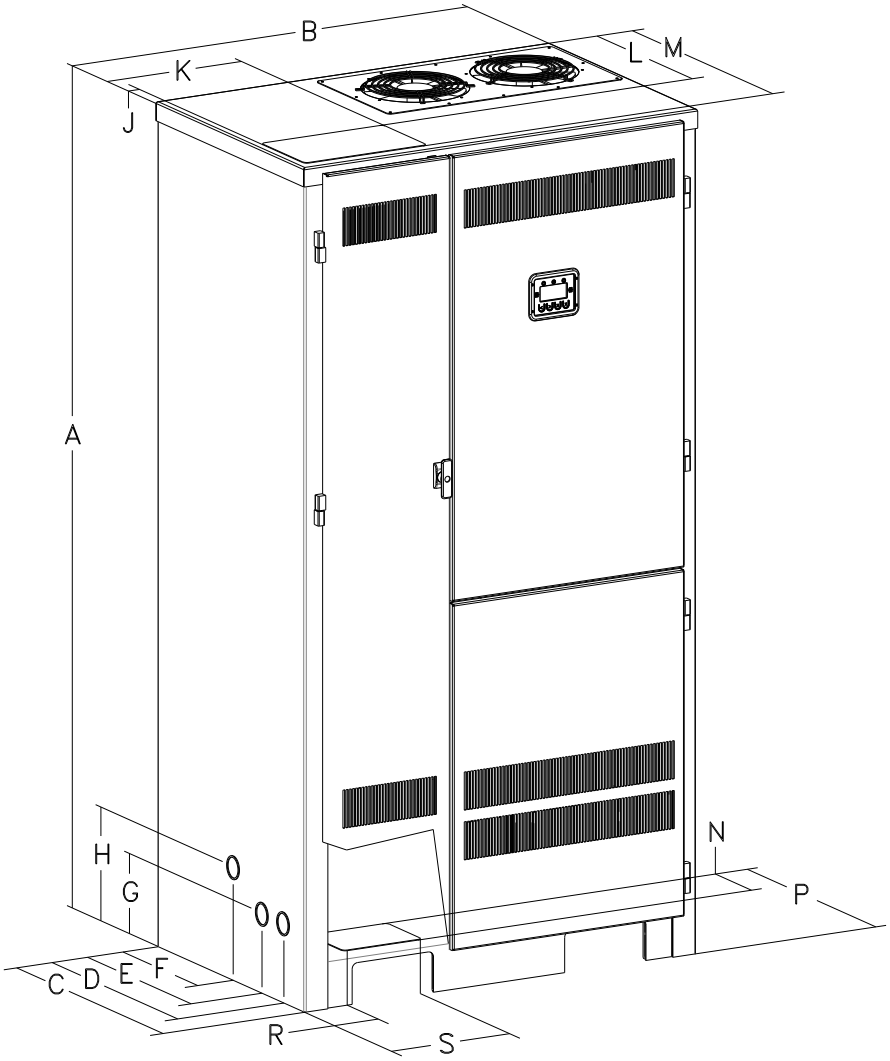

Figure 3.3

Table 3.3 Dimensions: 25-50kW, 90m runtime (16.7-50kW, 120m runtime)

Unit	Height (A)	Width (B)	Depth (C)	(D)	(E)	(F)	(G)	(H)
Electronics Cabinet	72” (182.9 cm)	37.5” (95.3 cm)	25” (64.0 cm)	20.9” (53.1 cm)	17.4” (44.2 cm)	12.6” (32.0 cm)	6.8” (17.3 cm)	9.6” (24.4 cm)

Table 3.3 Dimensions: 25-50kW, 90m runtime (16.7-50kW, 120m runtime)

Unit	(J)	(K)	(L)	(M)	(N)	(P)	(R)	(S)
Electronics Cabinet	1.2” (3.0 cm)	12” (30.5 cm)	16.2” (41.1 cm)	23.2” (58.9 cm)	5.5” (14.0 cm)	7.6” (19.3 cm)	5.3” (13.5 cm)	12” (30.5 cm)

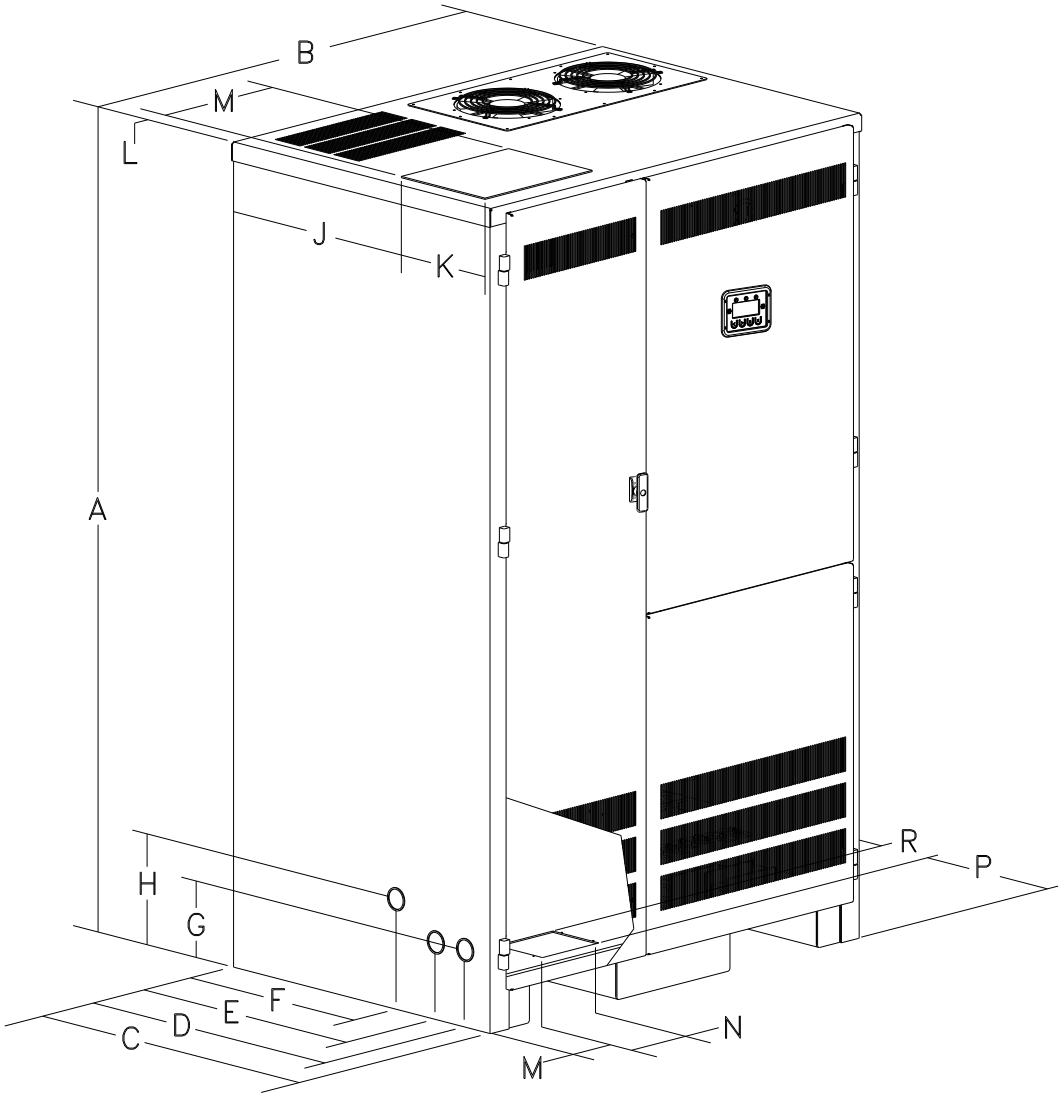

Figure 3.4

Table 3.4 Dimensions: 60-80kW, 90m runtime (45-60kW, 120m runtime)

Unit	Height (A)	Width (B)	Depth (C)	(D)	(E)	(F)	(G)	(H)
Electronics Cabinet	72” (182.9 cm)	44” (112.0 cm)	31” (79.0 cm)	27.75” (70.5 cm)	24.25” (62.6 cm)	19.5” (49.5 cm)	6.75” (17.2 cm)	9.5” (24.1 cm)

Table 3.4 Dimensions: 60-80kW, 90m runtime (45-60kW, 120m runtime)

Unit	(J)	(K)	(L)	(M)	(N)	(P)	(R)
Electronics Cabinet	22.65” (57.5 cm)	7” (17.8 cm)	1.15” (2.9 cm)	8.5” (21.6 cm)	6.75” (17.2 cm)	1.8” (4.6 cm)	5.5” (14.0 cm)

Table 3.5 Required Clearances

Sides	Top	Front
0” (0.0 cm)	12” (30.5 cm)	39” (100.0 cm)

Table 3.6 Conduit Knockouts

All
1 ¾” / 2” (4.45 cm / 5.09 cm)

Location Guidelines

Keep the following guidelines in mind when choosing the location for your system and batteries:

- Verify that the environment meets the requirements in “Storage and Operating Environment” on page 11. The environment can affect the reliability and performance of both the unit and the batteries.
- Install any separate battery cabinets as close as possible to the unit to reduce the cost of DC wiring and to improve battery performance. We recommend no clearance between the unit and the battery cabinet; in other words, the battery cabinet should be next to (against) the right side of the unit (when you face the front of the unit). If you must place the battery cabinet away from the unit, you must supply the proper length, gauge, and type of battery cables, and you must make sure the installation meets the applicable NEC requirements.

- Choose a permanent location for the unit and any battery cabinets. Attempting to move them after you have installed the batteries can damage the batteries and the cabinet.

CAUTION

Do not move the unit or the battery cabinet after you install the batteries. If you do, the unit or battery cabinet and batteries may be damaged.

If the room is equipped with a sprinkler system, the unit must be provided with sprinkler-proof drip cover. The cover shall be securely mounted 12”-24” above top of the unit and centered so that the unit lies fully within the coverage area of the drip cover.

The system should be connected to the emergency generator, if available.

This equipment is heavy. Refer to Tables 3.7 and 3.8 when you choose a site to make sure that the floor can support the weight of the system, the batteries, any separate battery cabinets, and any other necessary equipment.

Table 3.7 System Weight [in lbs. (kg)] for 90-Minute System Models

	90-Minute System Models												
	3.2kw	4.2kw	5.0kw	7.5kw	10.0kw	12.5kw	16.7kw	25kw	33.2kw	37.5kw	50kw	60kw	80kw
Inverter	485 (220)	485 (220)	485 (220)	485 (220)	590 (268)	640 (290)	640 (290)	1150 (522)	1150 (522)	1360 (617)	1360 (617)	1460 (663)	1550 (703)
Battery Cabinet(s) with Standard SLC Batteries	1245 (565)	1245 (565)	1245 (565)	1485 (674)	1725 (782)	2175 (987)	2775 (1259)	4750 (2155)	5550 (2517)	7125 (3232)	8325 (3776)	11,100 (5034)	13,875 (6294)
Battery Cabinet(s) without Batteries	285 (129)	285 (129)	285 (129)	285 (129)	285 (129)	375 (170)	375 (170)	750 (340)	750 (340)	1125 (510)	1125 (510)	1500 (681)	1875 (850)

Table 3.8 System Weight [in lbs. (kg)] for 120-Minute System Models

	120-Minute System Models												
	2.4kw	3.2kw	3.75kw	5.63kw	7.5kw	9.38kw	12.5kw	18.8kw	24.9kw	28.1kw	37.5kw	45kw	60kw
Inverter	485 (220)	485 (220)	485 (220)	485 (220)	590 (268)	640 (290)	640 (290)	1150 (522)	1150 (522)	1360 (617)	1360 (617)	1460 (663)	1550 (703)
Battery Cabinet(s) with Standard SLC Batteries	1245 (565)	1245 (565)	1245 (565)	1485 (674)	1725 (782)	2175 (987)	2775 (1259)	4750 (2155)	5550 (2517)	7125 (3232)	8325 (3776)	11,100 (5034)	13,875 (6294)
Battery Cabinet(s) without Batteries	285 (129)	285 (129)	285 (129)	285 (129)	285 (129)	375 (170)	375 (170)	750 (340)	750 (340)	1125 (510)	1125 (510)	1500 (681)	1875 (850)

Receiving and Moving the Unit and the Batteries

Systems weigh several hundred pounds; separate battery cabinets are also heavy (see Table 3.7 & 3.8; ask your sales representative for additional information). Make sure you are prepared for these weights before you unload or move the unit or the batteries. Do not install any batteries until you have permanently installed the unit and any battery cabinets and connected all conduit and wiring.

Storage and Operating Environment

Make sure you store and install the system in a clean, cool, dry place with normal ventilation for human habitation and level floors.

Storage Temperature

Store the batteries (in the system or battery cabinet) at -18 to 40°C (0 to 104°F). Batteries have a longer shelf life if they are stored below 25°C (77°F). Keep stored batteries fully charged. Recharge the batteries every 90–180 days. The system or battery cabinet without batteries may be stored at -20 to 70°C (-4 to 158°F).

Ventilation

The air around the unit must be clean, dust-free, and free of corrosive chemicals or other contaminants. Do not place the system or batteries in a sealed room or container.

Operating Temperature

System can operate from 20° to 30°C (68° to 86°F) and up to 95% relative humidity. The batteries' service life is longer if the operating temperature stays below 25°C (77°F).

Batteries

The temperature should be near 25°C (77°F) for optimum battery performance. Batteries are less efficient at temperatures below 18°C (65°F), and high temperatures reduce battery life. Typically, at about 35°C (95°F), battery life is half of what it would be at a normal temperature of 25°C (77°F). At about 45°C (113°F), battery life is one-fourth of normal.

Make sure that heaters, sunlight, air conditioners, or outside air vents are not directed toward the batteries. These conditions can make the temperature within battery strings vary, which can cause differences in the batteries' voltages. Eventually, these conditions affect battery performance.

If the batteries are not in the system, remember that the batteries should be installed as close as possible to the unit to reduce DC wiring costs and improve battery performance.

Do not allow tobacco smoking, sparks, or flames in the system location because hydrogen is concentrated under the vent cap of each cell of the battery. Hydrogen is highly explosive, and it is hard to detect because it is colorless, odorless, and lighter than air.

Every type of battery can produce hydrogen gas, even sealed maintenance-free batteries. The gas is vented through the vent caps and into the air, mainly when the unit is charging the batteries. The batteries produce the most hydrogen when maximum voltage is present in fully charged batteries; the batteries do not produce hydrogen during float charging. The amount of current that the charger supplies to the batteries (not the battery ampere-hour) determines how much hydrogen is produced.

High Altitude Operation

The maximum operating elevation is 3000m (10,000 ft) without derating. Required derating on output power is 4% per 300m (1000ft) above 3000m (10,000 ft).

CHAPTER 4

INSTALLATION OVERVIEW

Figure 4.1 through 4.6 shows typical installations of systems.

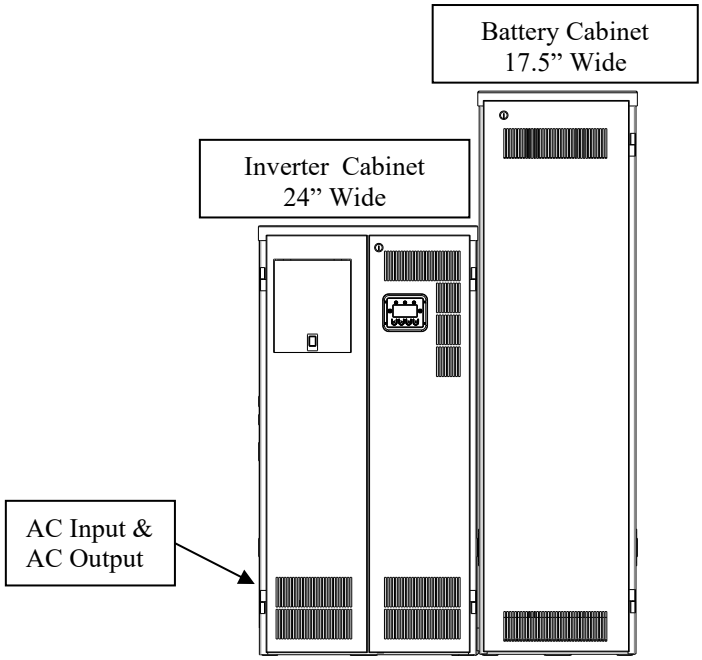

Figure 4.1 Typical Hardwired Installation – 3.2KW to 10.0KW Standard Systems

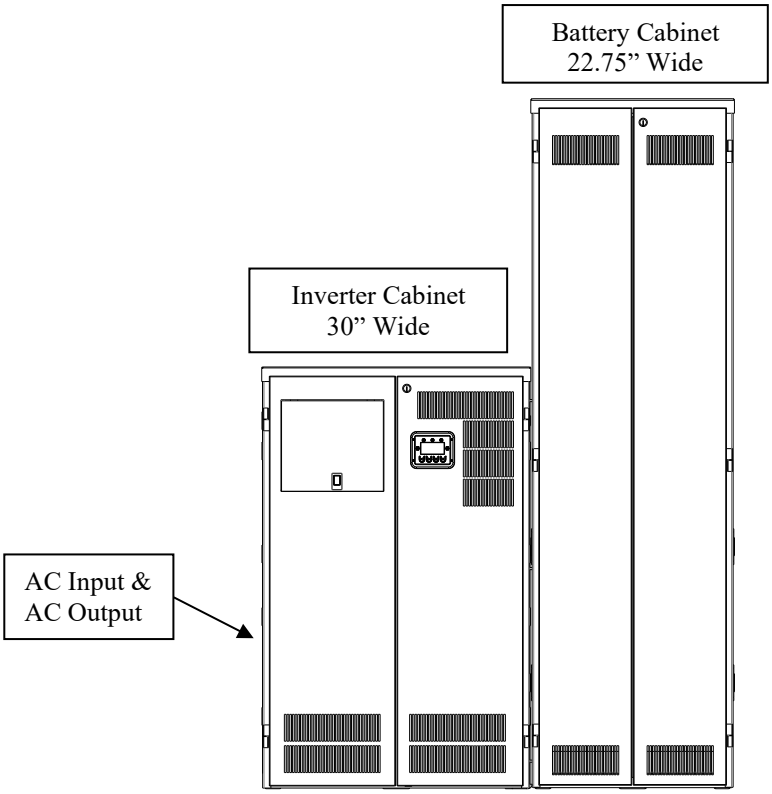

Figure 4.2 Typical Hardwired Installation – 12.5KW to 16.7KW Standard Systems

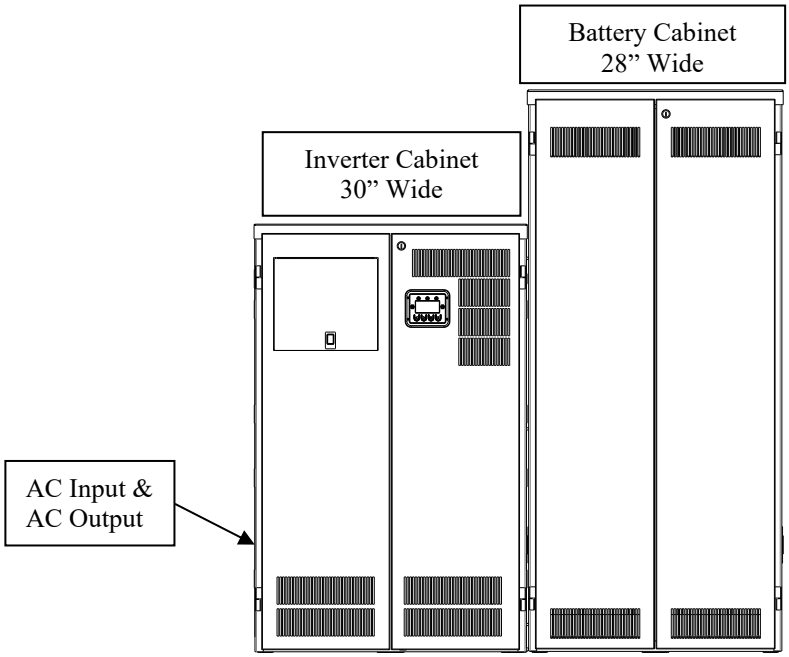

Figure 4.3 Typical Hardwired Installation – 12.5KW to 16.7KW Custom Systems

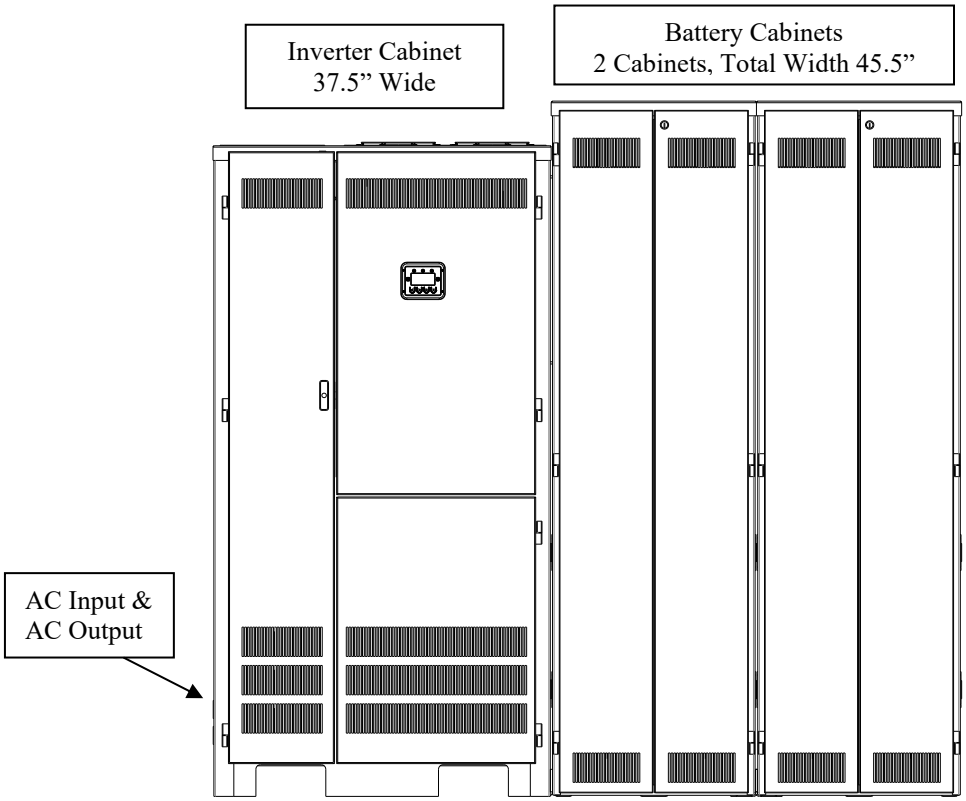

Figure 4.4 Typical Hardwired Installation – 25.0KW to 33.2KW Standard Systems

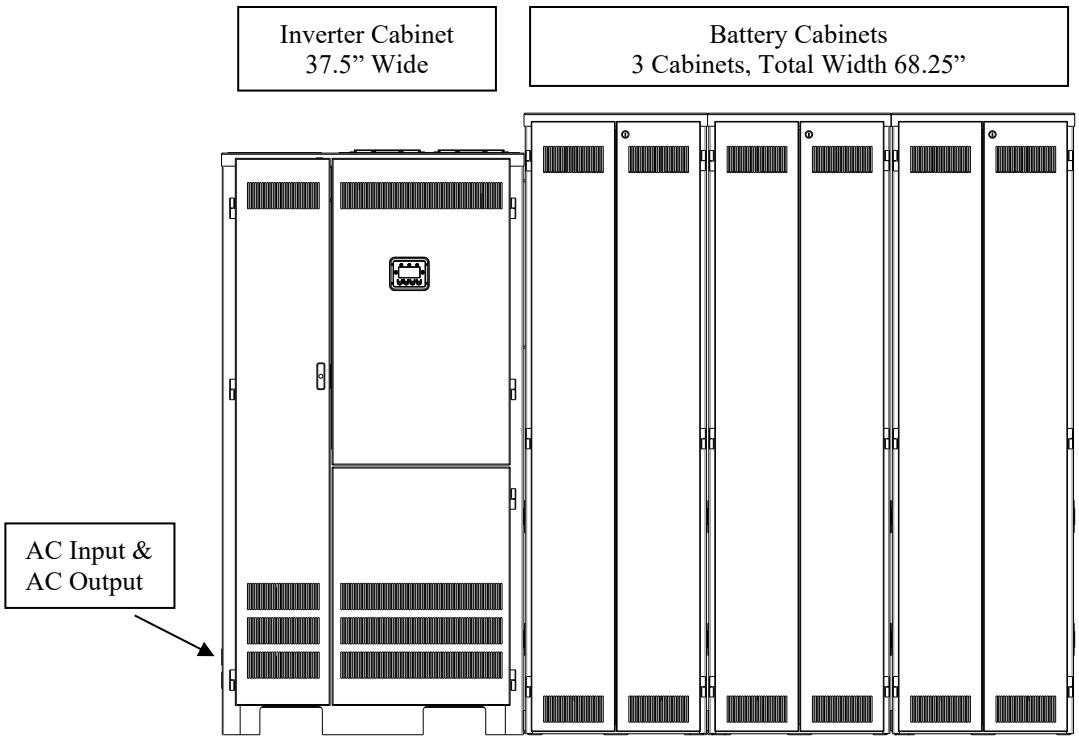

Figure 4.5 Typical Hardwired Installation – 37.5KW to 50.0KW Standard Systems

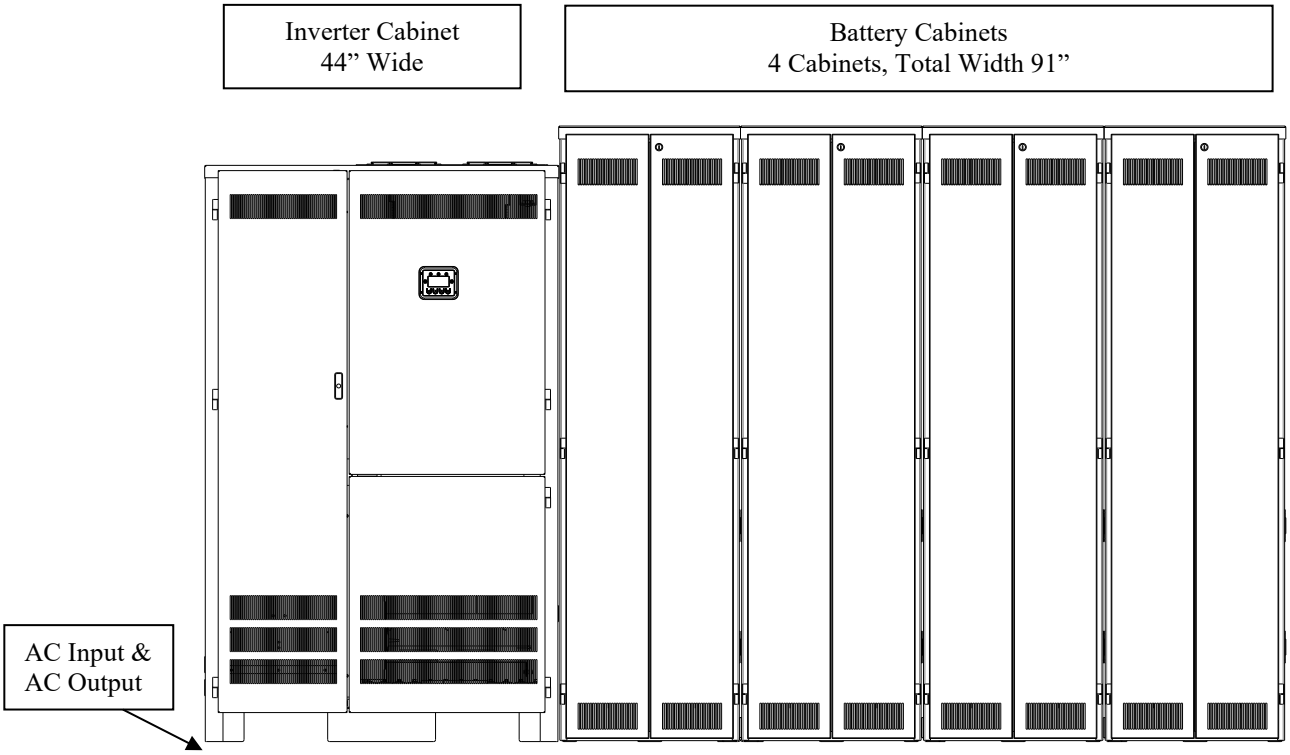

Figure 4.6 Typical Hardwired Installation – 60.0KW Standard Systems

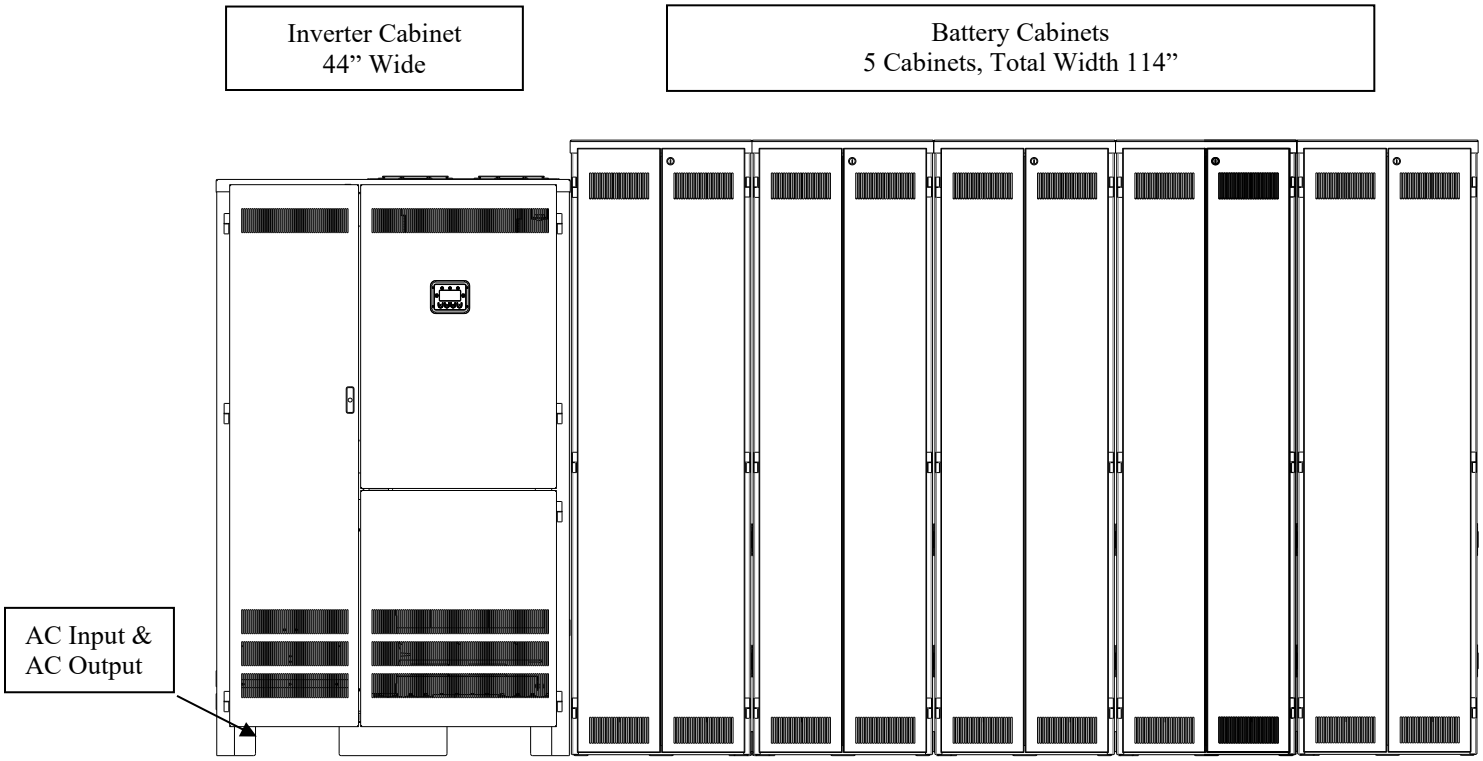

Figure 4.7 Typical Hardwired Installation – 80.0KW Standard Systems

CHAPTER 5

AC INPUT & AC OUTPUT INSTALLATION

WARNING

Only qualified service personnel (such as a licensed electrician) should perform the AC installation. Risk of electrical shock exists.

Read the following cautions before you continue.

CAUTION

- Unit contains hazardous AC and DC voltages. Because of these voltages, a qualified electrician must install the system, AC line service, and batteries. The electrician must install the AC line service according to local and national codes and must be familiar with batteries and battery installation.
- Before you install, maintain, or service the unit, always remove or shut off all sources of AC and DC power and shut off the system. You must disconnect AC line input at the service panel and turn off the Installation Switch (S1), the Main AC Input Circuit Breaker (CB1), the DC Circuit Breaker(s), and the Battery Cabinet Fuse(s) to make sure the unit does not supply output voltage.
- Whenever AC and/or DC voltage is applied, there is AC voltage inside the unit; this is because the unit can supply power from AC line or from its batteries. To avoid equipment damage or personal injury, always assume that there may be voltage inside the unit.
- Remove rings, watches, and other jewelry before installing the AC wiring. Always wear protective clothing and eye protection and use insulated tools when working near batteries. Whenever you are servicing an energized unit with the inside panel open, electric shock is possible; follow all local safety codes. TEST BEFORE TOUCHING!
- To reduce the risk of fire or electric shock, install the unit and its batteries in a temperature and humidity-controlled indoor area free of conductive contaminants. See page 11 for operating environment specifications.

---

1. Open the unit's doors. Make sure the installation switch, the AC input circuit breaker, and the DC battery circuit breaker(s) are off inside the unit.
2. Look at the ID label on the inside right door. Write down the following information:

   Input Voltage: _____

   Output Voltage: _____
3. Now, make sure the input and output voltages are what you need.

   The Input must be a 4 wire three phases – Neutral must be connected.

Does the input voltage available for the system at the AC service panel match the input voltage shown on the unit's ID label?

Service Panel Voltage = _____ Input Voltage ___*Yes* /___No

- Does the output voltage on the ID label match the voltage your loads (protected equipment) need?

  Load Voltage = _____ Output Voltage ___Yes/___No

  If you answered NO to either of the preceding questions, **call SERVICE**.

4. Now, use the information you wrote down in Step 2 to find the correct circuit breaker for the service panel that is for your system.

Table 5.1 Recommended Circuit Breaker for Maximum Input Current

System	Input Voltage (Vac)	Max. Current	Recommended Circuit Breaker
3.2 KW	120 / 208	12.5	15
3.2 KW	277 / 480	5.4	15
4.2 KW	120 / 208	16.5	20
4.2 KW	277 / 480	7.1	15
5 KW	120 / 208	19.6	25
5 KW	277 / 480	8.5	15
7.5 KW	120 / 208	29.4	40
7.5 KW	277 / 480	12.8	15
10 KW	120 / 208	39.2	50
10 KW	277 / 480	17.0	25
12.5 KW	120 / 208	49.0	60
12.5 KW	277 / 480	21.3	30
16.7 KW	120 / 208	65.5	80
16.7 KW	277 / 480	28.4	35
25 KW	120 / 208	98.0	110
25 KW	277 / 480	42.6	60
33.2 KW	120 / 208	130.2	150
33.2 KW	277 / 480	56.6	70
37.5 KW	120 / 208	147.1	175
37.5 KW	277 / 480	63.8	80
50 KW	120 / 208	196.1	225
50 KW	277 / 480	85.1	100
60 KW	277 / 480	102.1	110
80 KW	277 / 480	112.5	150

**** WARNING: THE EXTERNAL INPUT CIRCUIT BREAKER PROTECTING THE SYSTEM MUST BE A "MOTOR START", DELAYED TRIP TYPE IF INPUT AUTO OR INPUT ISOLATION TRANSFORMER WAS ADDED TO THE SYSTEM. THIS IS DUE TO MAGNETIC INRUSH CURRENT DRAWN DURING APPLICATION OF AC POWER. CONSULT FACTORY.**

5. Write down the circuit breaker value that applies to your system from Table 5.1:

6. Now, look at Table 5.2 below, and use the notes below to find the proper gauge wire or the recommended circuit breaker recorded in step 5.

Table 5.2 Recommended Minimum Wire Sizes

Read These Important Notes!	For this Input Circuit Breaker Size...	Use this Size 90°C Copper Wire	
		AWG	mm^2
This table lists the AWG and mm2 wire size for each circuit breaker size. The minimum recommended circuit breaker sizes for each model and voltage application are listed in Table 5.1. The temperature rating of conductor must not be less than 90° C wire. Based on the ampacities given in of the National Electrical Code, ANSI/NFPA 70 Table 310.15(B)(16) (CEC Table 2) and NEC Article 220 (CEC Section 4). Circuit conductors must be the same size (ampacity) wires and equipment-grounding conductors must meet NEC Table 250.122. Code may require a larger wire size than shown in this table because of temperature, number of conductors in the conduit, or long service runs. Follow local code requirements.	10, 15, 20	12	3.31
	25, 30	10	5.26
	35, 40, 45	8	8.36
	50, 60	6	13.30
	70, 80	4	21.15
	90, 100	2	33.62
	110	1	42.11
	125	1/0	53.49
	150, 175	3/0	67.43
	225	4/0	74.40

7. The input circuit breaker in the input service panel provides the means for disconnecting AC to the unit. Only authorized persons shall be able to disconnect AC to the unit; see NEC 700.20-21 (CEC Section 46). If you are using the input circuit breaker to disconnect AC, you must make sure that only authorized persons have control of the circuit breaker panel to meet the requirements of NEC 700.20 (CEC Section 46).

8. Read the following CAUTION before removing conduit knockouts.

CAUTION

To prevent electrical shock or damage to your equipment, the Installation Switch (S1), the Main AC Input Circuit Breaker (CB1), and the circuit breaker at the input service panel should all be turned off. The DC Battery Circuit Breaker(s) should be off, and the external DC Disconnect Fuse(s) should be removed.

9. Remove knockouts for AC Input and AC Output in the top or left side of the system. AC input conductors and AC output conductors must be installed in separate conduits, and emergency and non-emergency output circuits must be installed in separate conduits.

CAUTION

Do not drill the cabinet; drill filings may damage the unit and keep it from operating. If you need larger knockouts, use a chassis punch to punch out the appropriate knockout. Do not create additional knockouts.

10. Install the conduit. You must run the AC input service conductors and AC output conductors through separate conduits. Emergency output conductors and non-emergency output conductors must also be run through separate conduits. Emergency output circuits shall be installed in dedicated conduit systems and not shared with other electrical circuits as described in NEC 700.10 (CEC Section 47-108).

The next step explains where to make the AC connections to the system.

INSTALLING AC INPUT WIRES:

11. Connect AC utility from the service panel to the system's terminal block labeled **"INPUT"**. **Phasing must be clockwise Rotation** – i.e. Phase B lags Phase A.

Connect each Line (hot) wire to each of the input block positions marked **"Line"**, connect the Neutral (common) wire to the input block marked **"Neutral"** and the ground wire to the compression lug next to the input terminal block.

INSTALLING AC OUTPUT WIRES:

*****IF EXTERNAL MAINTENANCE BYPASS IS REQUIRED, SEE DEVIATION DRAWING FOR WIRING OF LOAD OUTPUT.***

12. Connecting load wires without system distribution circuit breakers – connect load wires to the system's terminal block labeled **"OUTPUT"**. Repeat as in step 11.

13. Connecting load wires with distribution circuit breakers – connect load wires directly to the circuit breakers and the neutral wires to the neutral bar.

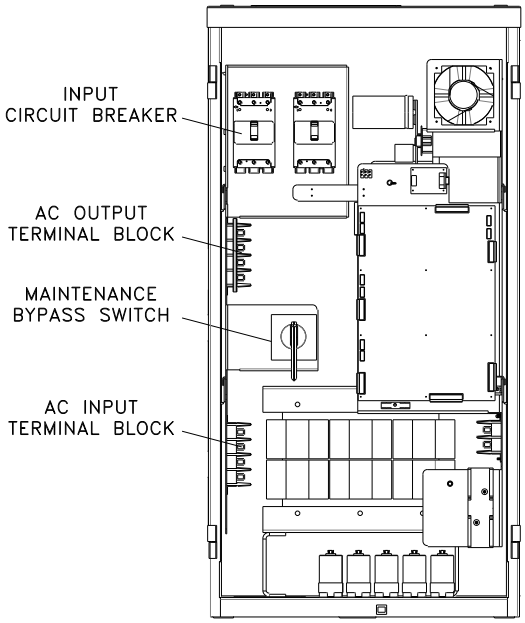

Figure 5.1 AC Input and Output Locations
3.2kW to 10kW Inverter Cabinet

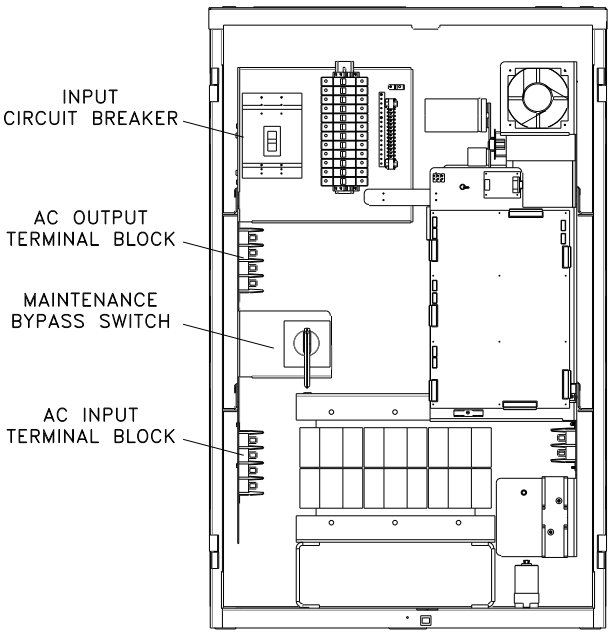

Figure 5.2 AC Input and Output Locations
12.5.kW to 16.7kW Inverter Cabinet

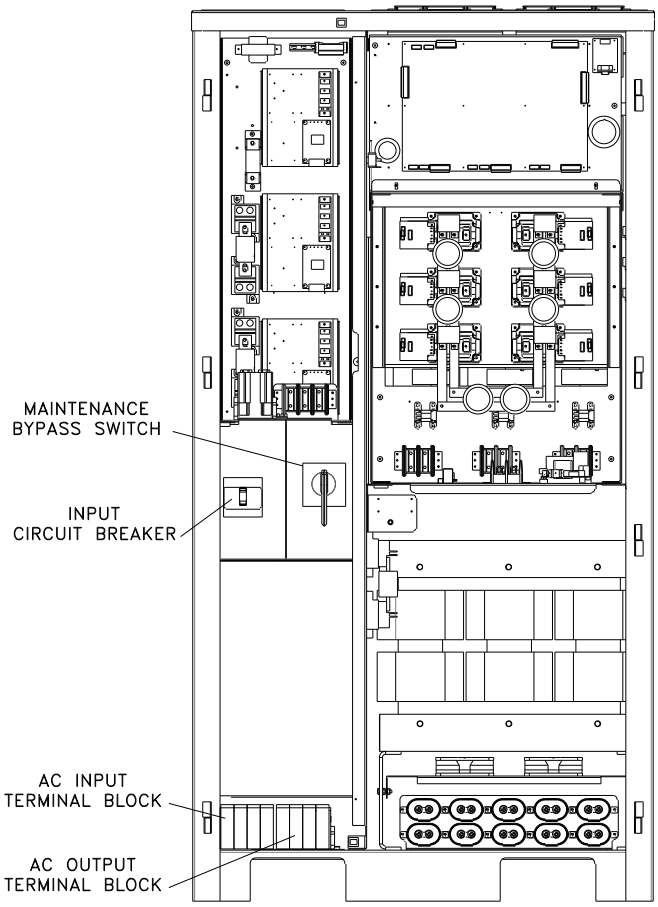

Figure 5.3 AC Input and Output Locations
25.0kW to 50kW Inverter Cabinet

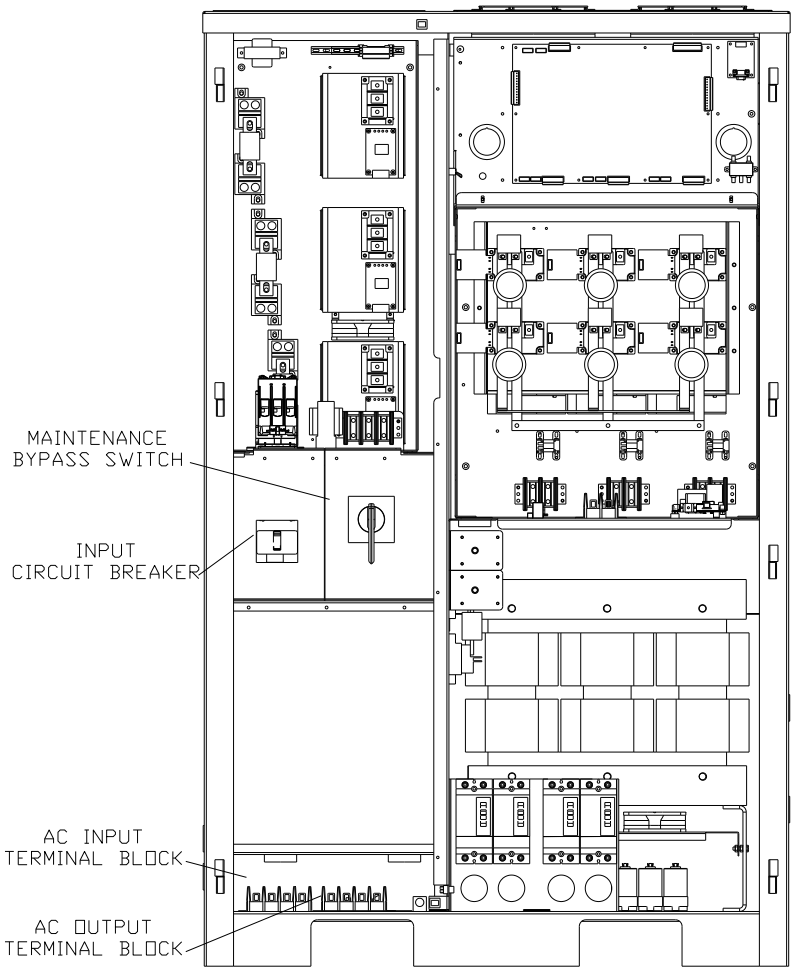

Figure 5.4 AC Input and Output Locations
60kW – 80kW Inverter Cabinet

CHAPTER 6

INSTALLING BATTERIES AND DC WIRING

WARNING

Only qualified service personnel (such as a licensed electrician) should perform the battery and DC wiring installation. Risk of electrical shock exists.

This section explains how to install system batteries, fuses, and cables. An electrician who is familiar with battery installations and applicable building and electrical codes should install the batteries.

WARNING

The batteries that will need to be installed in this system could cause you harm or severely damage the electronics if proper precautions are not followed. Batteries connected in series parallel configuration could produce lethal voltages with unlimited current. All batteries should be inspected for damage prior to installation. Never install a battery that is leaking electrolyte. Battery terminals should be cleaned with a wire brush to remove any oxidation. All tools should be insulated. Rubber gloves and safety glasses are recommended. **IN THIS SYSTEM BATTERY NEGATIVE IS TIED TO GROUND INSIDE THE INVERTER.** This means that the battery cabinet and shelves are at ground potential as soon as negative connections are made to the batteries. It is strongly recommended to make all negative connections to the batteries the last step to prevent any chance of shorting battery positive to ground. With the Battery Cabinet fuse(s) removed and the DC Breaker(s) turned off, make connections to battery positive first, working your way towards battery negative. Leave individual strings of batteries open at the last battery negative until all batteries are installed. Then connect each string's negative.

Safety Instructions

IMPORTANT SAFETY INSTRUCTIONS

SAVE THESE INSTRUCTIONS
This section contains important instructions that a qualified service person should follow during installation and maintenance of the system and batteries. ONLY a qualified service person should work with the batteries.

CAUTION

Full voltage and current are always present at the battery terminals. The batteries used in this system can produce dangerous voltages, extremely high currents, and a risk of electric shock. They may cause severe injury if the terminals are shorted together or to ground (earth). You must be extremely careful to avoid electric shock and burns caused by contacting battery terminals or shorting terminals during battery installation. Do not touch uninsulated battery terminals.

A qualified electrician familiar with battery systems and required precautions must install and service the batteries. Any battery used with this unit shall comply with the applicable requirements for batteries in UL924, the Standard for Emergency Lighting and Power Equipment. Cabinets are design to be used with, and batteries must be replaced with, manufacturer battery number BAT-CG12105X, BAT-CG12150X or BAT-CG12180X, or a manufacturer approved equivalent. See the battery wiring diagram that came with the battery cables. If you substitute batteries not supplied by manufacturer, the unit's UL listing is void and the equipment may fail. Installation must conform to national and local codes as well. Keep unauthorized personnel away from batteries.

The electrician must take these precautions:

Wear protective clothing and eyewear. For battery systems >48vdc, wear rubber gloves and boots. Batteries contain corrosive acids or caustic alkalis and toxic materials and can rupture or leak if mistreated. Remove rings and metal wristwatches or other metal objects and jewelry. Don't carry metal objects in your pockets where the objects can fall onto the batteries or into the system or battery cabinet.

Tools must have insulated handles and must be insulated so that they do not short battery terminals. Do not allow a tool to short a battery terminal to another battery terminal or to the cabinet at any time. Do not lay tools or metal parts on top of the batteries, and do not lay them where they could fall onto the batteries or into the cabinet.

Install the batteries as shown on the battery-wiring diagram provided with the system. When connecting cables, never allow a cable to short across a battery's terminals, the string of batteries, or to the cabinet.

Align the cables on the battery terminals so that the cable lug does not contact any part of the cabinet even if the battery is moved. Keep the cable away from any sharp metal edges.

CAUTION

Install the battery cables so the battery cabinet or the system doors cannot pinch them.

External battery cabinet chassis ground (or earth) must be connected to the system's chassis ground (or earth). The ground conductor must be insulated. If you use conduit, this ground conductor must be routed in the same conduit as the battery conductors.

Where conductors may be exposed to physical damage, protect conductors in accordance with the National Electrical Code (NEC).

If you are replacing batteries or repairing battery connections, follow the procedure in the system user's Guide to shut down your system and remove both AC and DC input power.

Before Installing the Batteries

Tools

CAUTION

Always use insulated tools when you work with batteries. Always torque connections to the manufacturer's recommendations.

When you work with system batteries, you need the following tools. The tools must be insulated so they do not short battery terminals to the cabinet. Wear the safety equipment required by local code whenever the doors are open and whenever you are working on batteries. Other tools may be necessary for optional batteries.

- Digital volt-ohm meter
- 7/16" socket wrench
- 3" extension socket
- Ratchet
- Wire brush
- Electrical tape
- Conductive grease or petroleum jelly
- Brush (to apply grease or petroleum jelly to terminals)
- 7/16" open end wrench
- Safety equipment required by local codes
- Torque wrench calibrated in inch-pounds or Newton-meters
- Safety glasses with side shields

Battery Voltage (vdc)

Models	3.2,4.2,5.0,7.5,10.0kW	12.5kW	16.7,25.0,33.2,37.5,50,60,80kW
Battery Volts	144v	180v	240v

Battery Cable Sizing

The battery cable or wire used varies. For the 100 AH battery (BAT-CG12105X) the size is 6 AWG (13.30 mm^2), for the 150 AH battery (BAT-CG12150X) the size is 4 AWG (21.15 mm^2), and for the 180 AH battery (BAT-CG12180X), the size is 2 AWG (33.6 mm^2). This is because the battery string current varies with battery type.

If the battery cabinets must be more than two feet (0.6 meters) from the main inverter cabinet, you may need to install larger battery cables between the battery cabinets and the system. Using long cable runs and larger diameter cables require a modified installation of the system; call SERVICE if you did not order the longer, larger-diameter cable with the system.

DC Disconnect

Systems have main DC Battery Circuit Breaker(s) inside the electronics cabinet that lets you remove DC power from the batteries when switched (OFF).

Systems also have a fuse in each battery string located in the battery cabinets.

Installing and Connecting the Batteries

Battery Wiring Diagram

You should have received a battery-wiring diagram with your system. This battery-wiring diagram shows how you should install the batteries, and make terminal, fuse, and breaker connections. Use the diagram as you follow the steps below.

Location

Before you start installing the batteries, you must install the system and battery cabinets in their permanent location. If you have not already done this, see “Location Guidelines” on page 10 to choose a location.

CAUTION

To prevent damage to your equipment, do not move the system or separate battery cabinets after the batteries are installed.

To make sure a location is acceptable for the system, review the requirements in Chapter 3.

Connecting the Cabinets

Wherever conductors may be exposed to physical damage, you must protect the conductors in accordance with the NEC. This includes battery cables between the system and a separate battery cabinet and cables between battery cabinets (if you have more than one).

We recommend routing the battery cable through the chase nipples. The battery cables shipped with the unit are designed for an installation with the battery cabinet immediately to the right of (touching) the system.

If the cabinets must be farther apart, we recommend that you use conduit (cables not included). Install the conduit for the battery cables according to local or national codes. If you are using conduit, you must substitute your own cables for the cables shipped with the unit as you follow the battery installation instructions. Remember that the terminal blocks supplied with the unit and battery cabinets accept up to 2/0 AWG (67.4 mm^2) wire. If code requires a larger size cable, you must use cable splices. Perform the splices when the instructions describe terminations at the terminal blocks. Use the correct type, length, and gauge of cable; make sure your installation meets all applicable electrical codes.

Installing the Battery Cables between Cabinets

You must pull the battery cables and the equipment-grounding conductor through the connecting nipple or through the conduit between the electronics cabinet and the battery cabinet(s).

NOTE *If you are using conduit, you must supply the correct length, gauge, and type of battery cables.*

Refer to the battery-wiring diagram to identify the battery cables you use to connect the electronics cabinet to the battery cabinet(s). If your unit has more than one battery cabinet use the battery-wiring diagram to identify which cables connect to each battery cabinet. Pull the cables through the connecting nipple or conduit. Do not connect any cables at this time.

Making the Equipment Ground Connection

Each battery cabinet ground (or earth) must be connected to the system's chassis ground. You can make this connection at the ground terminals inside the system and the battery cabinet as follows.

CAUTION

All grounding conductors should be insulated. If you are using non-insulated grounding conductors, take special care to make sure that the grounding conductors cannot accidentally contact live wires or the batteries.

In the system, find the ground compression lug labeled **"GROUND"**. This terminal is next to the AC terminal blocks.

1. You must supply the equipment-grounding conductor that connects the system to the nearest (or only) battery cabinet. Strip 0.5" (1.3 cm) of insulation from each end of the equipment-grounding conductor. Then, connect one end of the conductor to the ground lug in the system.
2. At the battery cabinet's ground lug. Connect the end of the grounding conductor to this lug.
3. If the unit has two battery cabinets, you must supply the grounding conductor that connects the cabinets. Strip 0.5" (1.3 cm) of insulation from each end of this grounding conductor. Connect one end to the ground lug in the first battery cabinet, and connect the other end to the matching ground lug in the next battery cabinet. Repeat this step if you have more than two battery cabinets.

NOTE *When you connect a separate equipment-grounding conductor directly to building steel, use the knockouts that are already on the unit. Do not make a knockout anywhere on the cabinet where there is not already a knockout.*

Electronics Cabinet Battery Connections

Do not connect any battery cables at this time. In the following procedure, you should only make connections to the electronics cabinet's fuse block, terminal block or circuit breaker. In some systems the first battery cabinet wiring may be already connected in the inverter electronics cabinet. The remaining wires will be located in the battery interconnect kit inside the battery cabinet. Use the battery-wiring diagram shipped with the battery cables as you follow these steps.

1. Find the positive battery cable (red wire) pulled between the electronics cabinet and the battery cabinet. At the ends of the cable, strip off 0.5" (1.3 cm) of insulation. Now, look at the battery-wiring diagram. Notice that this cable is connected from the positive position of the battery terminal block inside the electronics cabinet to the outside of the fuse block inside of the battery cabinet. Insert the positive (+) cable into fuse block and into the terminal block. Tighten the connections as shown on the battery-wiring diagram.

2. Find the negative battery cable pulled between the electronics cabinet and the battery cabinet. At the bare end of the cable, strip off 0.5" (1.3 cm) of insulation. Now, look at the battery-wiring diagram. Notice that this is connected from the negative position of the terminal block or circuit breaker inside the electronics cabinet to a battery inside of the battery cabinet. Insert the negative (-) cable into the terminal block and insulate the other end that is in the battery cabinet. Tighten the connection as shown on the battery-wiring diagram.

3. Repeat step 1 and 2 for each additional battery string (See battery layout drawing for quantity of battery strings).

Fuse

All systems come with a fuse for each battery string to protect the system. The battery-wiring diagram shows the fuse location; a label inside the battery cabinet shows the fuse size. The electronics cabinet contains a DC circuit breaker for each battery string. At each battery cabinet, find the cable that is connected to the other end of each fuse block. Insert the cable (red wire). Tighten the connection as shown on the battery-wiring diagram.

Repeat this step for each cabinet.

Verify that the battery circuit breaker(s) are (OFF) in the electronics cabinet, and the fuse(s) in the battery cabinet(s) are removed before connecting the batteries.

Arranging the Batteries

NOTE *As you arrange the batteries, you must be wearing the required safety equipment.*

Arrange the batteries in the cabinet or the system only as shown in the battery-wiring diagram. This arrangement is designed to maximize airflow around the batteries. The cabinets are designed so that battery cases should never touch. Air should be free to circulate. Clean the entire surface of all battery terminals with the wire brush before you install the batteries to create good contact points.

Load the batteries into the system or battery cabinet(s). Starting with the bottom shelf, load one shelf at a time.

CAUTION

Never install the batteries in an airtight enclosure.

Connecting the Cables Between Batteries

When you make battery terminal connections, use the torque wrench to tighten the battery terminal connections securely. You can find out what torque value to use by finding the battery number on the front of the battery. Then, use Table 6.1 to find the torque value for that battery.

Table 6.1 Battery Torque

Battery Type	Torque
BAT-CG12105E	Torque to 100 in lbs. (11.3 Nm)
BAT-CG12105H	Torque to 71-88 in lbs. (8.0-10.0 Nm)
TPL121000	Torque to 120 in lbs. (13.6 Nm)
BAT-CG12150C	Torque to 89-106 in lbs. (10.0-12.0 Nm)
BAT-CG12150D	Torque to 100 in lbs. (11.3 Nm)
TPL121600	Torque to 120 in lbs. (13.6 Nm)
BAT-CG12180	Torque to 89-106 in lbs. (10.0-12.0 Nm)
TPL121800	Torque to 120 in lbs. (13.6 Nm)

Now, follow these steps to connect the cables:

1. Using the battery-wiring diagram, determine which batteries belong to each battery string.

2. Clean the cable connectors with the wire brush before you make the battery connections. Torque all battery terminal connections to the value shown for your battery in Table 6.1.

NOTE *As you carry out the following step, use these guidelines:*
If you are using conductive grease, apply a thin coating of high-temperature conductive grease on each post and every cable connector before you assemble and torque the connection to slow corrosion.
If you use nonconductive grease like petroleum jelly, do not apply any grease before you make the connections and torque them. Instead, make the connection first; then, torque it to the value shown in Table 6.1. After you make the connection, apply a coating of the nonconductive grease to the hardware at the battery terminals.

3. In each battery string, connect the battery tie straps between the batteries as shown in the battery-wiring diagram (positive terminal to negative terminal).
4. Connect the battery cables from one shelf to the next as shown on the battery-wiring diagram.
5. Connect the fuse block to the positive of the battery (red wire) as shown on the battery-wiring diagram.

CAUTION

Hazardous voltage is present! System batteries are high current sources. These batteries can produce dangerous voltages, extremely high currents, and a risk of electric shock.

6. Install all the battery cabinet fuse(s). Next, use the voltmeter to check the DC voltage between the positive (+) position on the battery block inside the electronics cabinet and the unconnected battery negative terminal. This voltage should be approximately the battery voltage record on the unit ID label. If it is greater than + or – 10%, review the battery wiring diagram. Correct any wiring errors and recheck the DC voltage; do not go on until your measurement is within + or – 10%. If the measurement is too high and you cannot find the cause of the problem, call SERVICE.

CAUTION

If you do not verify that voltage and current direction are correct, the equipment may fail.

Connecting the Negative Battery Cable(s) to the Battery String(s)

Remove the insulation from the cable that was put on in step 2 of “Electronics cabinet battery block connections”. Connect the cable to the battery (-) negative. Repeat this step for systems with multiple strings.

Replacing the Batteries

CAUTION

A battery can present a risk of electrical shock and high short circuit current. A qualified electrician familiar with battery systems should service the batteries.

Review all the safety instructions at the beginning of this chapter before you replace any batteries.

Use the Same Quantity and Type of Battery

CAUTION

You must use the same quantity and type of battery. Substituting batteries not supplied by manufacturer voids the UL listing and may cause equipment damage.

To ensure continued superior performance of your system and to maintain proper charger operation, you must replace the batteries in the system or battery cabinets with the same number of batteries. These batteries must be the same types as the original batteries. The replacement batteries should have the same voltage and ampere-hour rating as the original batteries.

Handle Used Batteries with Care!

Assume that old batteries are fully charged. Use the same precautions you would use when handling a new battery. Do not short battery terminals or the battery string with a cable or tool when you disconnect the batteries! Batteries contain lead. Please dispose of old batteries properly.

CAUTION

Do not dispose of batteries in a fire because the batteries could explode. Do not open or mutilate batteries. Released electrolyte is harmful to the skin and eyes. It may be toxic.

Dispose of Batteries Properly

CAUTION

Batteries contain lead. Many state and local governments have regulations about used battery disposal. Please dispose of the batteries properly.

CHAPTER 7

TURNING ON THE SYSTEM AND SETTING PARAMETERS

Several parameters in the system software determine when and how your system conducts the automatic monthly and annual tests. Refer to “Program Functions” in the “Front Panel Display” chapter of the system user’s Guide for a description of each test.

Starting the Unit

Before you can set the parameters, you must start the system.

CAUTION: HAZARDOUS VOLTAGES – ONLY QUALFIED SERVICE PERSONNEL SHOULD PERFORM PROCEDURE.

1. Verify that the installation switch located on the inverter chassis is in the (OFF) position and that the DC battery circuit breaker(s) and AC input circuit breaker are (OFF). Install all battery cabinet fuses.
2. Press and hold the DC Pre-charge switch located on the inverter chassis (see Figure 7.1, 7.2, 7.3, 7.4) for 30 seconds, and then switch the DC battery circuit breaker(s) to the (ON) position. If a large flash occurs or if the circuit breaker trips, the batteries are not connected properly. Call service immediately.
3. Energize the Mains AC input by turning (ON) the unit’s input circuit breaker (see Figure 5.1, 5.2, 5.3, 5.4) and/or the Distribution Panel breaker located upstream from the inverter.
4. Turn the installation switch to the (ON) position. The Front Panel display should now be illuminated and a slight hum should be heard from the inverter transformer. The unit is now charging and the output should be energized.

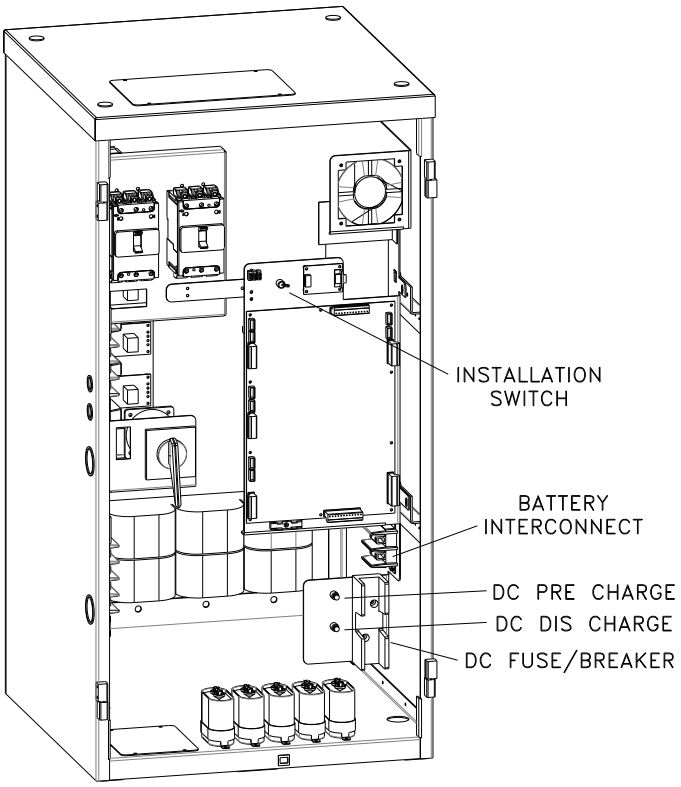

Figure 7.1 DC Battery Circuit Breaker, Pre-charge Switch, Discharge Switch & Installation Switch (3.2kW – 10kW)

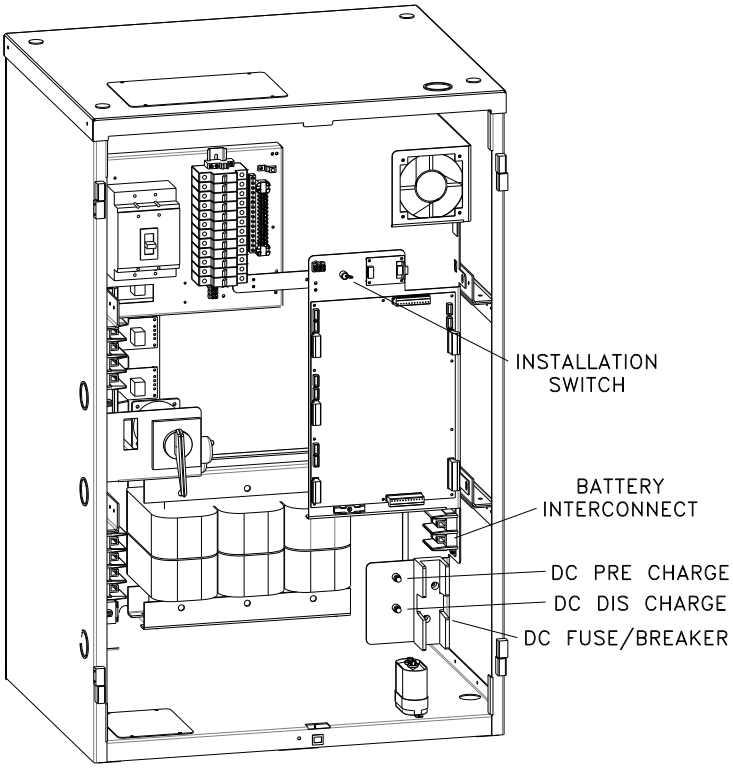

Figure 7.2 DC Battery Circuit Breaker, Pre-charge Switch, Discharge Switch & Installation Switch (12.5kW – 16.7kW)

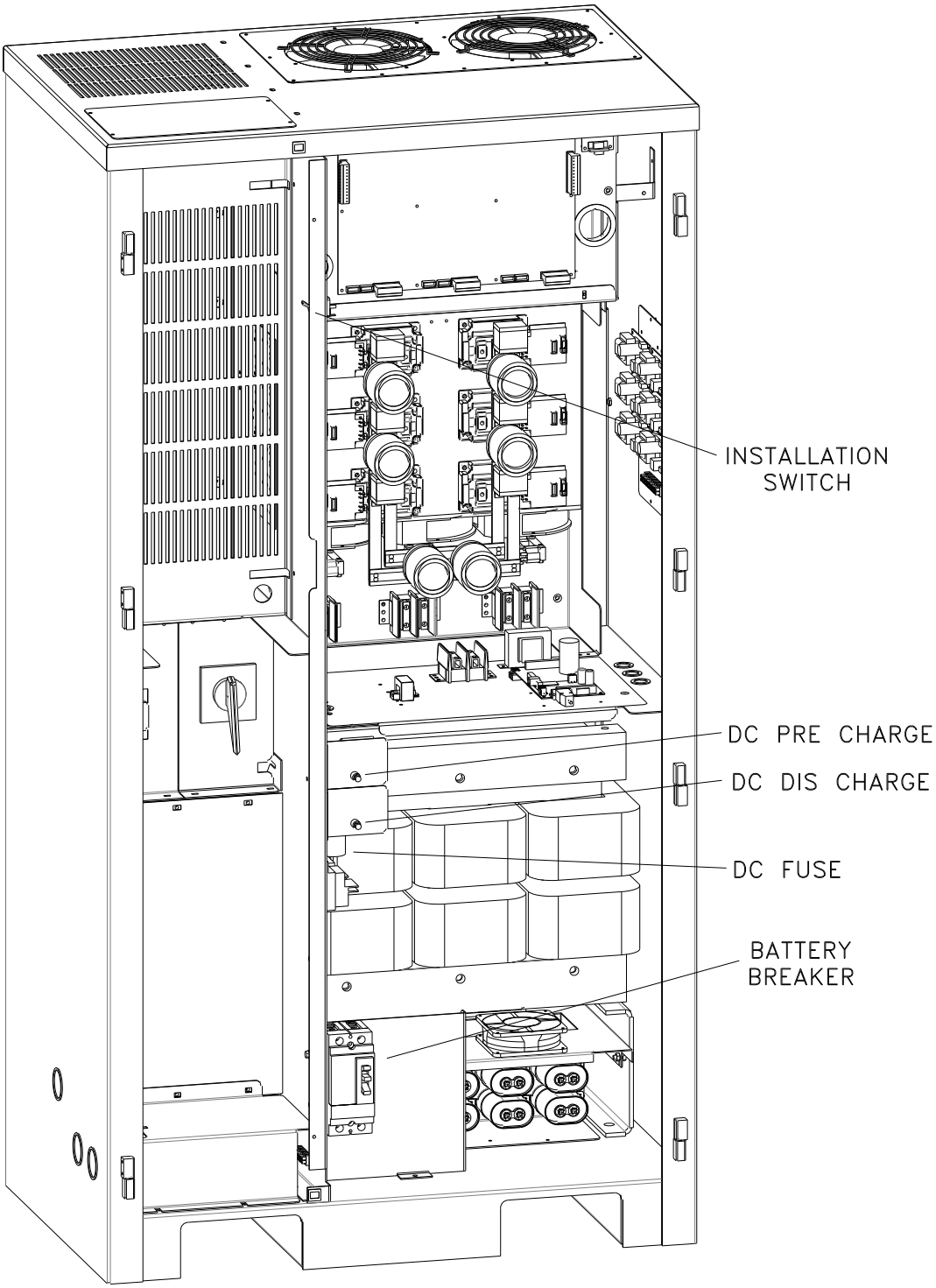

Figure 7.3 DC Fuse, DC Battery Circuit Breaker, Pre-charge Switch, Discharge Switch & Installation Switch (25kW – 50kW)

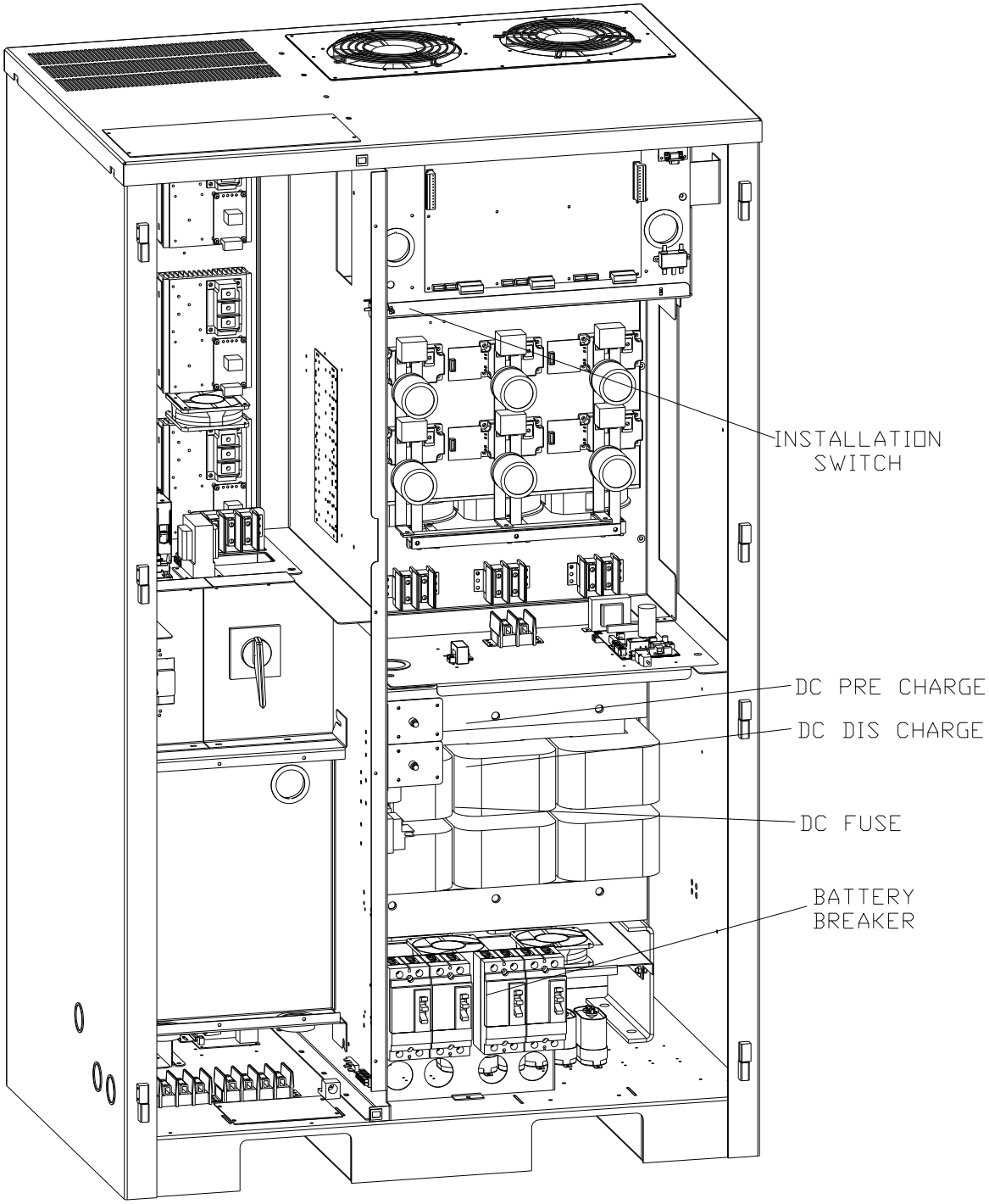

Figure 7.4 DC Fuse, DC Battery Circuit Breaker, Pre-charge Switch, Discharge Switch & Installation Switch (60kW-80kW)

FRONT PANEL DISPLAY

The Front Panel Display assembly consists of an OLED display and a 4-button keypad. The 4 buttons can navigate through all the menus by using the left and right arrow keys, the ENTER and the ESCAPE.

The default menu will scroll between the Identification/Date-Time screen, the Status Screen, and the Meter screens. To view the other menu options from the default screen, press the **ENTER** key, and then press the left or the right arrow key to go to the desired menu.

The Menu's available are Meter, System Status, System Setup, Log View, Maintenance, Unit Info, and Alarms/Faults.

Once the desired menu has been reached, press the **ENTER** key to gain access to this menu. Once into the menu, use the left or right arrow key to scroll to different functions within the menu. Press the **ENTER** key again to gain access to the desire function. To exit, press the **ESCAPE** key until the desired level has been reached. (See figure 7.5)

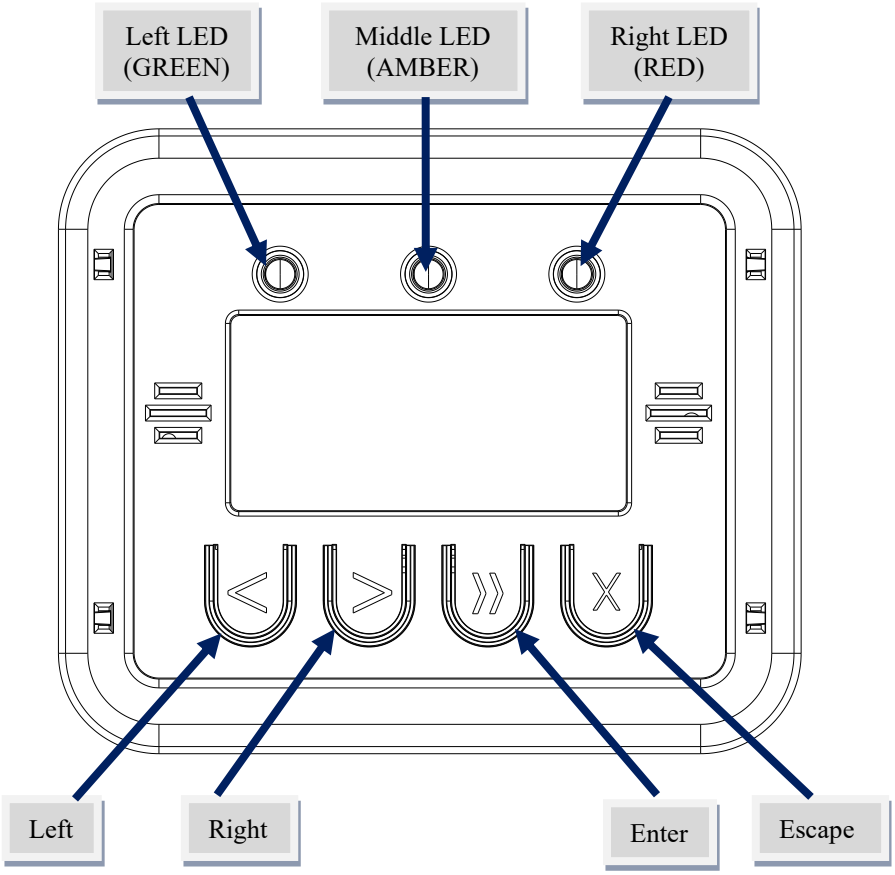

Figure 7.5 Front Panel Display

LED Function

The inverter Front Panel Display (FPD) features three LEDs: A green LED (on the left), an amber LED (in the middle), and a red LED (on the right). One LED (and only one LED) will always be on. The following table describes the meaning behind each of the LEDs:

Table 7.1 Keypad Functions

LED Color (position)	Meaning
GREEN (left)	There are no alarms, and the inverter is running the load on utility power.
AMBER (middle)	There are no alarms, but the inverter is running the load on battery power.
RED (right)	There are one or more active alarms asserted. Refer to 'Alarms' screen (below) for more information.

Control Panel Keypads

Table 7.2 Keypad Functions

Key Name	Description
LEFT (<)	This key functions as Left scroll key.
RIGHT (>)	This key functions as Right scroll key.
ENTER (»)	Pressing this key will view menus.
ESCAPE (x)	Pressing this key will exit out of menus and return to the Identification/Date-Time screen.

Meter

To get to the Meter functions from the default screen, press the **ENTER** key, scroll to the METER menu using the left or the right arrow key, then press the **ENTER** key again. Use left or the right arrow key to view the Meter function desired.

Table 7.3 Meter Functions

Function	Description
Input Voltage	Measures the AC Input Voltage to the Inverter for each phase.
Output Voltage	Measures the AC Output Voltage from the Inverter for each phase.
Output Current	Measures the AC Output Current from the Inverter for each phase.
Battery Current	Measures the DC Battery Current. When in charge mode, the current will be positive. When in Inverter mode, the current will be negative.
Battery Voltage	Measures DC Battery Voltage.
Output Power	Indicates the AC Wattage of the Inverter output total and for each phase.
Battery Power	Indicates the total DC Watts (Battery Power) the Inverter is processing.
Ambient Temperature	Measures the internal ambient temperature inside the system.
Operating Days	Indicates the total days the system has been on-line.
Inverter Runtime	Indicates the total minutes the system has run on inverter.

System Status

To get to the System Status from the default screen, press the **ENTER** key, scroll to the SYSTEM STATUS heading using the left or the right arrow key, then press the **ENTER** key again. If there are more than 3 statuses present, use left or the right arrow key to scroll through all.

Indicates the Status of the machine – AC Present, Battery Charging, System Ready, On Battery Power, and any Alarms/Faults present.

System Setup

To get to System Setup from the default screen, press the **ENTER** key, scroll to the SYSTEM SETUP menu using the left or the right arrow key, then press the **ENTER** key again. Use left or the right arrow key to view the System Setup functions.

Set Date
The parameters are Year, Month, and Day.
To change any of the parameters, use the left or right arrow key depending on if you want to increase or decrease. Once the parameter is correct, press the **ENTER** key and the next parameter can be changed.

Set Time
The parameters are Hour and Minute. The 24-hour standard is used so 2:00 PM would be 14 hours. Use the left or right arrow key to change the parameters and the **ENTER** key to scroll between parameters.

Config Buzzer
For audible buzzer the parameter is Enabled/Disabled. Use the left or right arrow key to change the setting and the **ENTER** key to save. WARNING: disabling the buzzer will disable audible notification when the inverter transfers to battery power or when there is an inverter alarm or fault. The default buzzer setting is enabled; once the system is shut down, the default setting is reactivated upon restart.

Config Setpoints
Available configurable setpoint values are Battey Voltage, Ambient Temperature, Input Voltage, Max Runtime, Load Reduction, and Max Current. To change the number, press the **ENTER** key and then use the left or right arrow key. Once the desired number is reached, press the **ENTER** key and this will return to the top-level menu.

Battery Voltage – Battery bank Low and Near Low values in Volts DC.

Table 7.4 Near Low Battery Fault Chart

DC Voltage	Near Low Battery
144VDC	130VDC
180VDC	162VDC
240VDC	216VDC

Ambient Temperature – Internal high temperature setpoint in Degrees Centigrade.

Input Voltage – Utility Low and High value setpoints in Volts AC.

Max Runtime – Elapsed time the inverter may run in emergency mode, setpoint in minutes.

Load Reduction – This will automatically generate an alarm when the system output current is 10 percent higher or lower than the setpoint number, set in Amps AC.

Max Current – This will automatically generate an alarm when the system output current is higher than the setpoint number, set in Amps AC. Depending on the duration and severity of the overcurrent event, the inverter may shut down to protect the electronics.

Log View

To get to the Log menu from the default screen, press the **ENTER** key, scroll to the LOG VIEW menu using the left or right arrow key, then press the **ENTER** key again. Use the left or right arrow key to view the type of log desired, and the press the **ENTER** key for more information. Available logs are Alarm, Event, and Test.

The Alarm Log creates a new log every time an alarm becomes active. The number of alarms that can be captured in the Alarm Log is 75. The format is first in is first out so; alarm number one is the most recent alarm. Each Alarm Log entry indicates the Log Number, Alarm type, Date, and Time of the alarm.

The Event Log captures data and creates a new log every time there is a transfer from utility power to battery power. The number of events that can be captured in the Event Log is 75. The format is first in is first out so; event number one is the most recent event. Each Event Log entry indicates the Log Number, Event type, Date, and Time of the event on Page 1. Press the ENTER key again to view Page 2, with Output Voltage logged for each phase. Press the ENTER key again to view Page 3, with Output Current logged for each phase. Press the ENTER key again to view Page 4, with Ambient Temperature and Event Duration.

The Test Log captures data and creates a new log every time an automatic monthly or yearly test occurs. The number of tests that can be captured in the Test Log is 75. The format is first in is first out so; test number one is the most recent test. Each Test Log entry indicates the Log Number, Monthly or Yearly test type, Date, and Time of the test on Page 1. Press the ENTER key again to view Page 2, with Output Voltage logged for each phase. Press the ENTER key again to view Page 3, with Output Current logged for each phase. Press the ENTER key again to view Page 4, with Ambient Temperature and Test Duration.

Maintenance

To get to the Maintenance menu from the default screen, press the **ENTER** key, scroll to the MAINTENANCE menu using the left or right arrow key, then press the **ENTER** key again. The display will prompt for a password.
****** The password is left arrow, right arrow, left arrow, and right arrow. ******

Once the password is entered, use the left or right arrow key to view the specific Maintenance setting desired, and the press the ENTER key for more information. The

user has access to change the following settings: Self Test, Monthly Test, Yearly Test, Factory Setup, and Clear Logs.

Self Test
This will manually perform a 1-minute self test, causing the inverter to run on battery power.

Monthly Test
The parameters are Day, and Time in Hour and Minute. The 24-hour standard is used so 2:00 PM would be 14 hours.
To change any of the auto monthly test parameters, use the left or right arrow key depending on if you want to increase or decrease. Once the parameter is correct, press the **ENTER** key and the next parameter can be changed.

Yearly Test
The parameters are Month, Day, and Time in Hour and Minute. The 24-hour standard is used so 2:00 PM would be 14 hours.
To change any of the auto yearly test parameters, use the left or right arrow key depending on if you want to increase or decrease. Once the parameter is correct, press the **ENTER** key and the next parameter can be changed.

Factory Setup
An additional password is required to access the Factory Setup functions, and only the factory is authorized to have this password.

Clear Logs
This permanently clears all previous Alarm, Event, and Test Log records.

Unit Info

To get to Unit Info from the default screen, press the **ENTER** key, scroll to the UNIT INFO heading using the left or right arrow key, then press the **ENTER** key again.

Indicates Current Software Revision Level of the front panel display.

Alarms/Faults

To get to Alarms/Faults from the default screen, press the **ENTER** key, scroll to the ALARMS/FAULTS heading using the left or right arrow key, then press the **ENTER** key again.

The alarm/fault menu displays all active alarms and faults. If there are none active, the display screen will indicate no alarms or faults.

Keypad Setup Mode

The Front Panel features a Setup Mode where you can do the following:

- See the firmware version of the Front Panel Display.
- Disable or Re-enable the buzzer on the Front Panel display. WARNING: disabling the buzzer will disable audible notification when the inverter transfers to battery or when there is an inverter alarm.
- Disable or Re-enable the “soft button guides”, which are symbols that hover over the buttons (on the bottom of the display screen, next to their respective buttons) when the buttons are touched, to guide the User on which button is which. The button guides are very helpful when the Lighting Inverter is in a dark room where the symbols engraved on the buttons are difficult to see but may be disabled if the Lighting Inverter is always in a bright room and hiding the button guides from the screen is aesthetically preferred.
- Soft reset the Front Panel display, as a troubleshooting step in case of a software issue.

Setup Mode is entered (and also exited) by holding down the RIGHT (>) and ENTER (») keys together for 3 seconds at any time.

When in Setup Mode, navigate as follows:

- Use the LEFT (<) and RIGHT (>) keys to toggle the currently selected setting.
- Use the ENTER (») and ESCAPE (x) keys to navigate back and forth between setting.

Completing the Installation

Close the doors and lock the cabinet(s). You have finished installing the system. Follow the steps in the Startup and Warranty Validation form to test the installation and startup the system for the first time. After you complete this form, return it to the manufacturer to validate the warranty.

Keep the System Installation Guide and the User’s Guide in the folder attached to the inside of the system door.

Notes: